**Aeroponic Cloner by StinkBud**
**vers 1.1 10/18/08**

**1/2" PVC Pipe Lengths:**
8 - 7" lengths
2 - 1 1/2" lengths
1 - 2 1/4" length

**Tools List:**
Electric Drill
11/64" Drill Bit
2" Hole Saw
PVC Pipe Primer & Glue
PVC Pipe Cutter
Exacto Knife
Tape Measure
Pliers
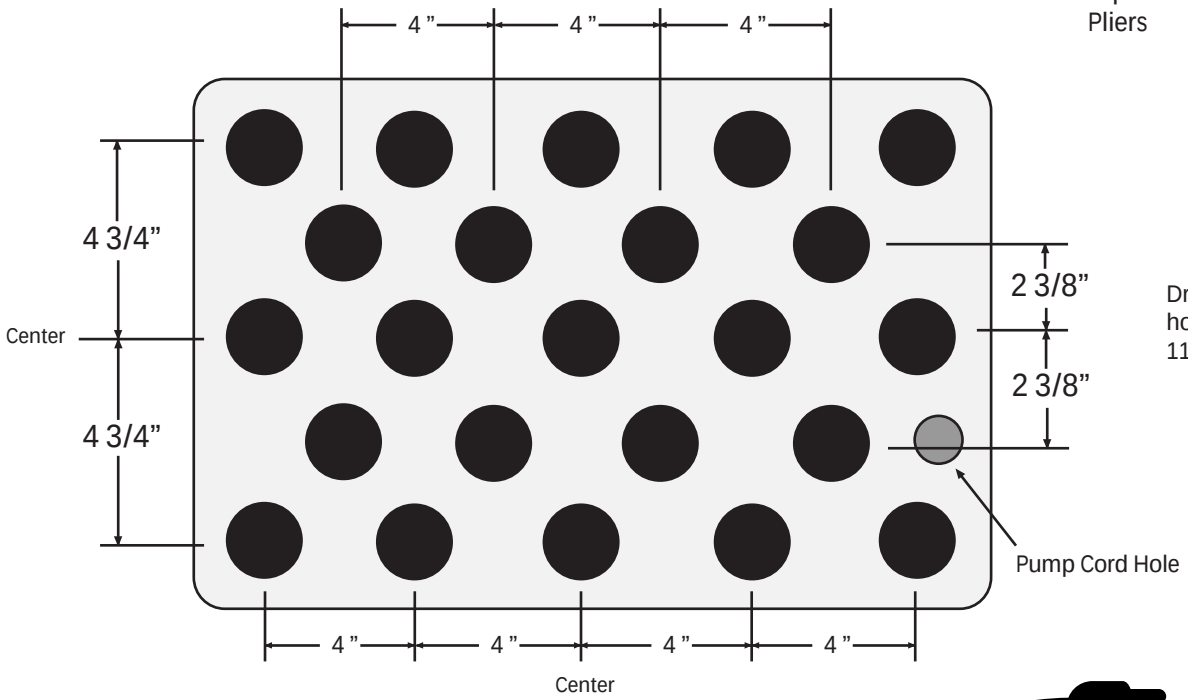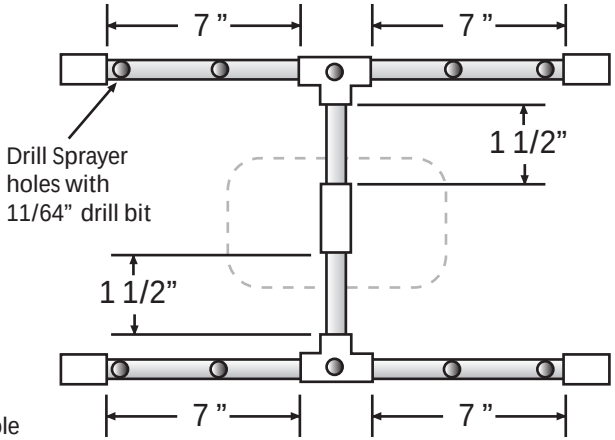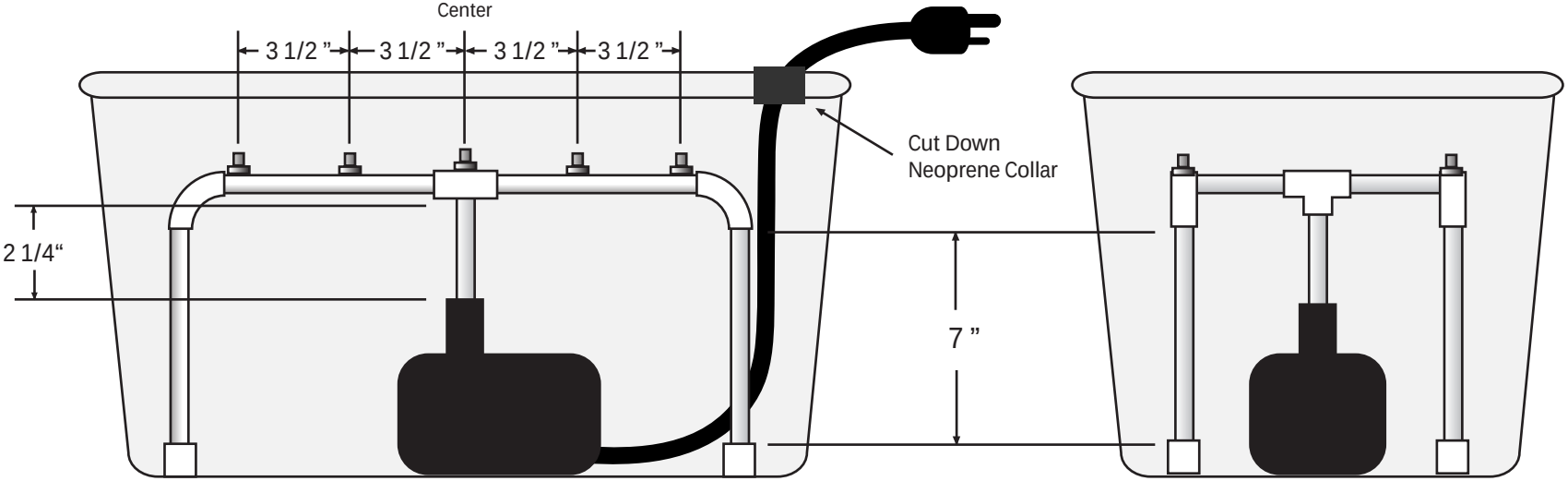
**Parts List:**
1 - 396 GPH Pump
3 - 1/2" Tees
2 - 1/2" Elbows
1 - 10ft. length 1/2" PVC Pipe
4 - 1/2" End Caps
1 - Rubbermaid Ru□neck Container
23 - 2" Net Pots
24 - 2" Neoprene Collars
8 - EZ-Clone Sprayers